SX50/SX50H PACKAGES

Simplex and Duplex Explosion-Proof Packages
Submersible Sump Pump/Control Panel

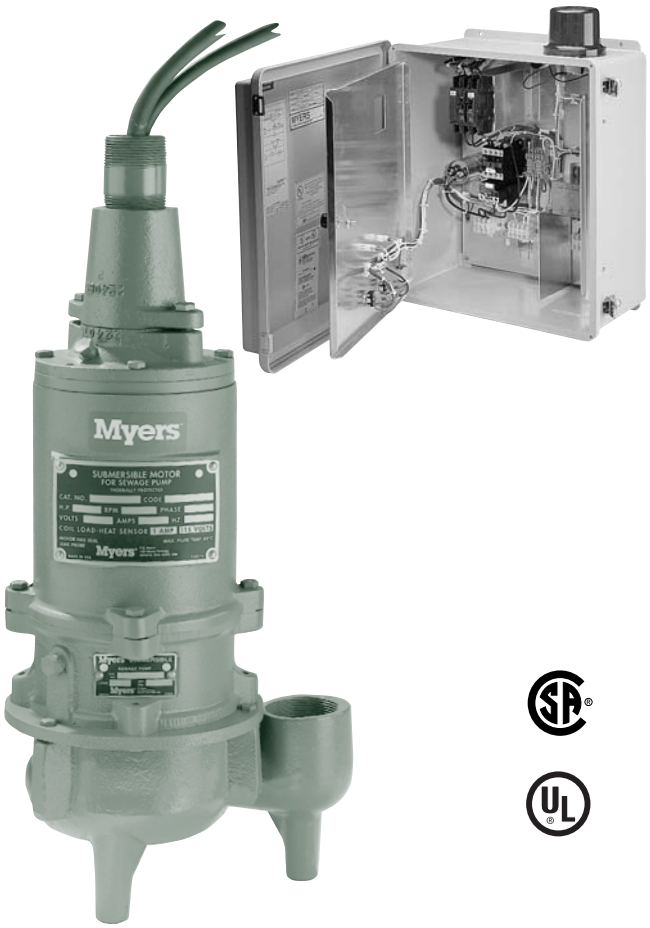

MYERS SX50 AND SX50H ARE RUGGED ½ HP EXPLOSION-PROOF SUBMERSIBLE SUMP PUMPS DESIGNED FOR MANY COMMERCIAL, MUNICIPAL, OR INDUSTRIAL APPLICATIONS. The SX50 and SX50H are U.L. and CSA listed with construction for use in Class 1, Division 1, Group D hazardous locations. These pumps are designed to pump contaminated water with a wide range of pollutants listed under the U.L., CSA listing. The pump package includes Myers intrinsically safe control panel. For additional information, please contact your local Myers representative or the Myers Ohio sales office at 419-289-6898.

MYERS CEX CONTROL PANELS FEATURE:

- NEMA 4X enclosure with inner door
- Separate pump and control circuit breaker
- intrinsically safe module for floats
- H-O-A switch
- Run, seal leak, and alarm light
- Motor starter and capacitor
- U/L 913
- Solids handling up to 2"

APPLICATIONS INCLUDE

- Service stations
- "Quick-lube" stations
- Car/truck washes
- Truck docks
- Military base

PUMP/CONTROL PANEL PACKAGES

SIMPLEX 1Ø
SX50-21PS (high flow)
SX50H-21PS (high pressure)

SIMPLEX 3Ø
SX50-23PS (high flow)
SX50H-23PS (high pressure)

DUPLEX 1Ø
SX50-21PD (high flow)
SX50H-21PD (high pressure)

DUPLEX 3Ø
SX50-23PD (high flow)
SX50H-23PD (high pressure)

PRODUCT CAPABILITIES

Capacities To	95 gpm	360 lpm
Heads To	34 ft.	10 m
Solids Handling SX50 SX50H	2 in. ¾ in.	50 mm 19 mm
Liquids Handling	domestic effluent & drain water	
Intermittent Liquid Temp.	up to 140° F	up to 60° C
Winding Insulation Temp. (Class B)	266°F	130°C
Motor Electrical Data (Single phase motors are capacitor start type. Myers control panels or capacitor kits are recommended for proper operation and warranty.)	½ hp, 1750 rpm 1Ø - capacitor start, 230 volt; 60 Hz 3Ø- 200/230/460V; 60 Hz	
Std. Third Party Approvals	CSA, UL Class 1 Div. 1, Group D	
Acceptable pH Range	6 - 9	
Specific Gravity	.9 - 1.1	
Viscosity	28 - 35 SSU	
Discharge, NPT SX50 SX50H	2 in. 1½ in.	50 mm 38.1 mm
Min. Sump Diameter Simplex Duplex	 24 in. 36 in.	 61.0 cm 91.4 cm

Note: Consult factory for applications outside of these recommendations.

Construction Materials	
Motor Housing, Seal Housing, Cord Cap, Volute Case	cast iron, Class 30, ASTM A48
Impeller	recessed, cast iron, Class 20 A48
Power Cord	15' 14/4 SOOW
Control Cord	15' 18/5 SOOW
Mechanical Seals - Std. Opt.	dbl. tandem carbon & ceramic lower tungsten carbide
Pump, Motor Shaft	416 SST
Fasteners	300 Series SST

WHERE INNOVATION MEETS TRADITION

Myers®
Pentair Water

STATOR
½ hp, 1750 RPM, 1 or 3 phase. Press fit for perfect alignment and best heat transfer. Oil-filled motor conducts heat and lubricates bearings.

CABLE ENTRY SYSTEM
Provides double seal protection. Cable jacket sealed by compression grommet. Individual wires sealed by epoxy potting.

HEAT SENSOR
Protects motor from burn-out due to excessive heat from any overload condition. Automatically resets when motor has cooled.

BALL BEARINGS
Upper and lower ball bearings support shaft and rotor and take axial and radial loads.

HEAVY 416 SST SHAFT
Corrosion resistant. Reduces shaft deflection due to grinding loads.

SHAFT SEALS
Double tandem mechanical shaft seals protect motor. Oil-filled seal chamber provides continuous lubrication.

SEAL LEAK PROBE
Detects water in seal housing, activates warning light in control panel.

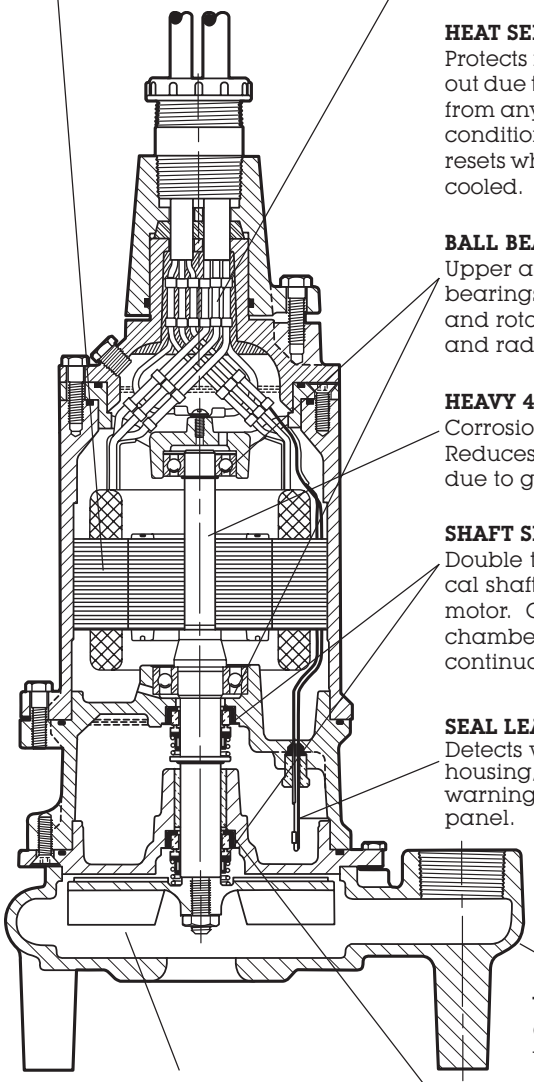

VOLUTE CASE
Cast iron 1½" - 2" vertical discharge.

IMPELLER
Cast iron recessed impeller handles ground slurry without clogging or binding. Provides unobstructed flow passage. Reduces radial loads. Pump-out vanes help keep trash from seal, reduces pressure at seal faces.

SLEEVE BEARING
Takes radial load; provides flame path.

DIMENSIONS

(Dimensions in mm)

SX50

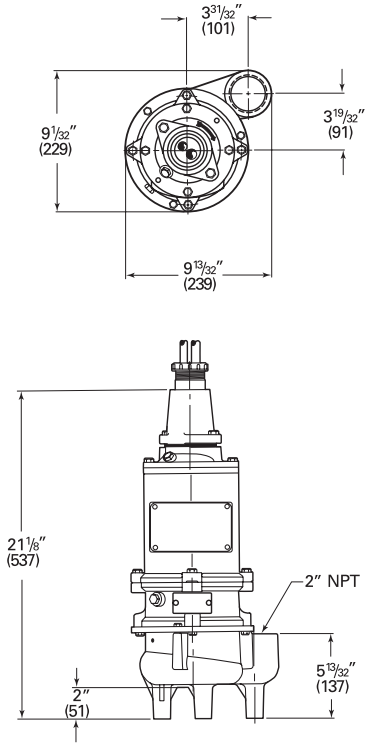

SX50H

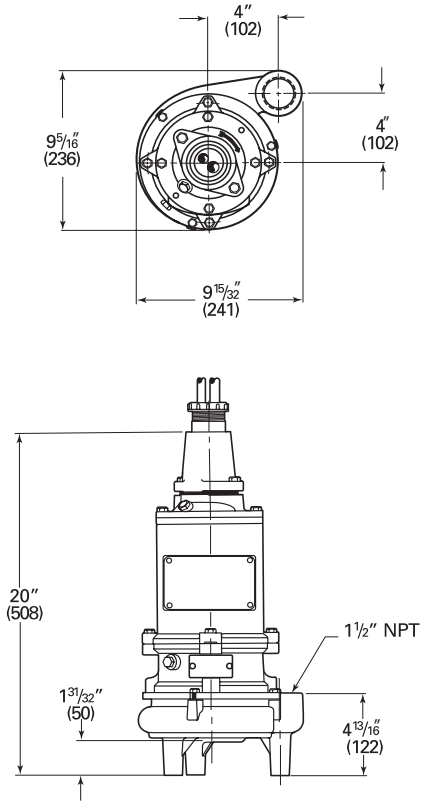

PUMP PERFORMANCE

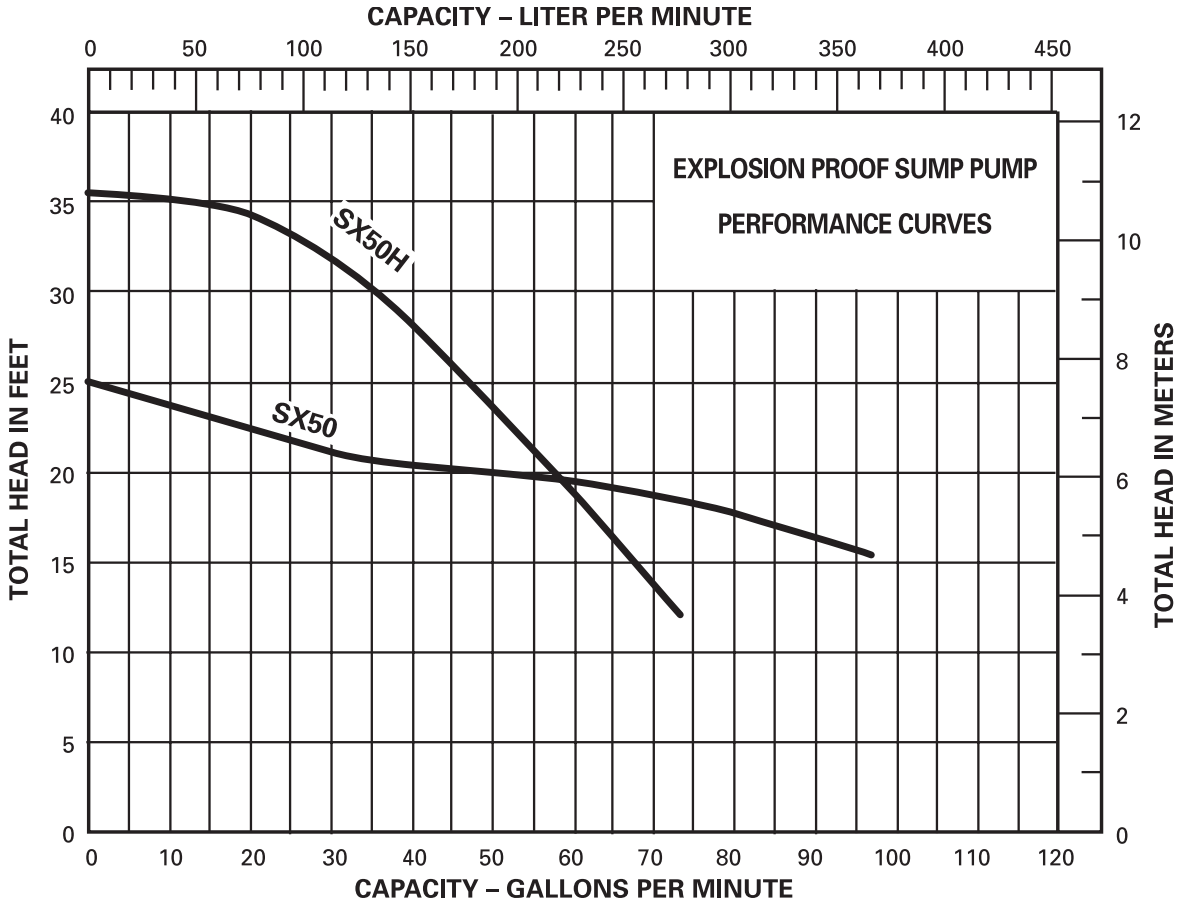

Available Models	Motor Electrical Data								
Standard	HP	Volts	Phase	Hz	Start Amps	Run Amps	Service Factor Amps	NEC Code Letter	Service Factor
SX50-21	½	230	1	60	12.5	5.3	5.8	H	1.1
SX50H-21	½	230	1	60	12.5	5.3	5.8	H	1.1
SX50-23	½	230	3	60	10.8	3.2	4.0	G	1.25
SX50H-23	½	230	3	60	10.8	3.2	4.0	G	1.25

SX50/SX50H PACKAGES

SPECIFICATIONS

PUMP MODEL - Pump shall be of the centrifugal type Myers model SX50/SX50H with an integrally built in submersible type motor. Discharge shall be 1-1/2" NPT_____ OR 2" NPT_____. Pump shall be capable of passing a full 3/4"_____ or 2"_____ diameter solid. Motor shall be UL listed for Class 1, Div. 1, Group D.

OPERATING CONDITIONS - Pump shall have a capacity of _____ GPM at a total head of _____ feet and shall use a 1/2 HP motor operating at 1750 RPM.

MOTOR - Pump motor shall be of the submersible type rated 1/2 horsepower at 1750 RPM. Motor shall be for single phase 208 volts____, 230 volts____ or three phase 200 volts_____, 230 volts_____, 460 volts_____ or 575 volts_____. Single phase motors shall be of P.S.C. type NEMA N type. Three phase motors shall be NEMA B type.

Stator winding shall be of the open type with Class B insulation good for 130°C (266°F) maximum operating temperature. Winding housing shall be filled with a clean high dielectric oil that lubricates bearings and seals and transfers heat from windings and rotor to outer shell. Air-filled motors which do not have the superior heat dissipating capabilities of oil-filled motors shall not be considered equal.

Motor shall have two heavy duty ball bearings to support pump shaft and take radial and thrust loads and a sleeve guide bushing directly above the lower seal to take radial load and act as flame path for seal chamber. Ball bearings shall be designed for 50,000 hours B-10 life. Stator shall be pressed into motor housing.

A heat sensor thermostat shall be attached to top end of motor winding and shall be connected in series with the magnetic contactor coil in control box to stop motor if motor winding temperature reaches 221°F. Thermostat to reset automatically when motor cools. Two heat sensors shall be used on 3 phase motors.

The motor pump shaft shall be of #416 stainless steel threaded to take pump impeller.

SEALS - Motor shall be protected by two mechanical seals mounted in tandem with a seal chamber between the seals. Seal chamber shall be oil filled to lubricate seal face and to transmit heat from shaft to outer shell.

Seal face shall be carbon and ceramic and lapped to a flatness of one light band. Lower seal faces shall be _____carbide (optional).

A double electrode shall be mounted in the seal chamber to detect any water entering the chamber through the lower seal. Water in the chamber shall cause a red light to turn on at the control box. This signal shall not stop motor but shall act as a warning only, indicating service is required.

PUMP IMPELLER - The pump impeller shall be of the recessed Myers type to provide an open unobstructed passage through the volute for solids. Impeller shall be of cast iron and shall be threaded onto stainless steel shaft.

PUMP CASE - The pump case shall be designed for a recessed vortex impeller and have unobstructed passageways to handle full spherical solids. The pump volute shall be constructed of Class 30 gray cast iron.

MOTOR CASTINGS - The motor housing castings shall be high tensile strength Class 30 gray cast iron.

CORROSION PROTECTION - All iron castings shall be pretreated with phosphate and chromic rinse and to be painted before machining and all machined surfaces exposed to the sewage water to be repainted. All fasteners to be 302 stainless steel.

BEARING END CAP - Upper motor bearing cap shall be a separate casting for easy mounting and replacement.

POWER CABLES - Power cord and control cord shall be double sealed. The power and control conductor shall be single strand sealed with epoxy potting compound and then clamped in place with rubber seal bushing to seal outer jacket against leakage and to provide for strain pull. Cords shall withstand a pull of 300 pounds to meet U.L. requirements.

Insulation of power and control cords shall be type SOOW. Both control and power cords shall have a green carrier ground conductor that attaches to motor frame.

5/06
Printed in U.S.A.

Pentair Water™

F. E. Myers, 1101 Myers Parkway, Ashland, Ohio 44805-1969
419/289-6898, FAX: 419/289-6658, myerspump.com

Myers (Canada), 269 Trillium Drive, Kitchener, Ontario N2G 4W5
519/748-5470, FAX: 519/748-2553