4V and 4VX (EXPLOSION-PROOF)

4" Non-Clog Wastewater Pumps
Standard (4V) and Explosion-Proof (4VX) Construction

THE 4V AND 4VX (EXPLOSION-PROOF) SUBMERSIBLE WASTEWATER PUMPS PASS A FULL 3" SPHERICAL SOLID AND ARE THE IDEAL CHOICE WHEN SELECTING A PUMP FOR YOUR NEXT APPLICATION. Myers rounded port, 2-vane, enclosed impellers prevent solids from binding or clogging and offer high operating efficiencies to cut your pumping costs. The 4V series modified constant velocity volute case provides smooth operation over an extended portion of the performance curve for longer seal and bearing life. For use in municipal lift stations, treatment plants and industrial waste applications. Myers offers a complete line of wastewater pumps, lift-out rail assemblies, controls and accessories to meet your needs. For more information, contact your Myers distributor or the Myers Ohio sales office at 419-289-1144.

ADVANTAGES BY DESIGN

HIGH EFFICIENCY HYDRAULIC DESIGN CUTS PUMPING COSTS AND EXTENDS LIFE OF FLUID END COMPONENTS.

- Two-vane, rounded port, enclosed type impellers handle 3" solids with ease at high operating efficiencies.
- Modified constant velocity volute offers quiet operation, low radial loads over extended portion of performance curve.

DURABLE MOTOR WILL DELIVER MANY YEARS OF RELIABLE SERVICE.

- Oil-filled motor for maximum heat dissipation and constant bearing lubrication.
- Heat sensor thermostats imbedded in windings protect motor from overheat conditions.
- Seal leak probe in seal chamber warns of moisture entry; helps prevent costly motor burnout.
- Double tandem shaft seals prevent sewage from entering motor.
- Power and control cables are double sealed with epoxy and compression grommet.

AVAILABLE WITH OPTIONAL UL APPROVAL FOR USE IN CLASS 1, GROUP D HAZARDOUS LOCATIONS (4VX ONLY).

PRODUCT CAPABILITIES

Capacities To	715 gpm	45.1 lps
Heads To	59 ft.	17.9 m
Solids Handling (dia.)	3 in.	76 mm
Liquids Handling	raw unscreened sewage, effluent, storm water	
Intermittent Liquid Temp.	up to140°F	up to 60°C
Winding Insulation Temp. (Class F)	311°F	155°C
Motor Electrical Data (Single phase motors are capacitor start type. Myers control panels or capacitor kits are required for proper operation and warranty.)	**1750 RPM** 3–5 HP, 230V, 1Ø, 60 Hz 3–10 HP, 200/230/460/575V 3Ø, 60 Hz **1150 RPM** 1–2 HP, 200/230V, 1Ø, 60 Hz and 208/230/460/575V 3Ø, 60 Hz	
Std. Third Party Approvals Optional Approvals	CSA UL Class 1, Group D (4VX only)	
Acceptable pH Range	6–9	
Specific Gravity	.9–1.1	
Viscosity	28–35 SSU	
Discharge, Flanged Centerline (Horizontal)	4 in. 125 lb. ANSI	101.6 mm

NOTE: Consult factory for applications outside of these recommendations.

Construction Materials	
Motor Housing, Seal Housing, Cord Cap and Volute Case	cast iron, Class30 ASTM A48
Enclosed 2-Vane Impeller	ductile iron, Class 65 ASTM A536
Power and Control Cord	25 ft. SOOW
Mechanical Seals Standard Optional	double tandem, type 21 carbon and ceramic lower tungsten, carbide
Pump, Motor Shaft	416 SST
Fasteners	300 series SST
Volute Wear Ring	brass

WHERE INNOVATION MEETS TRADITION

Myers®
Pentair Water

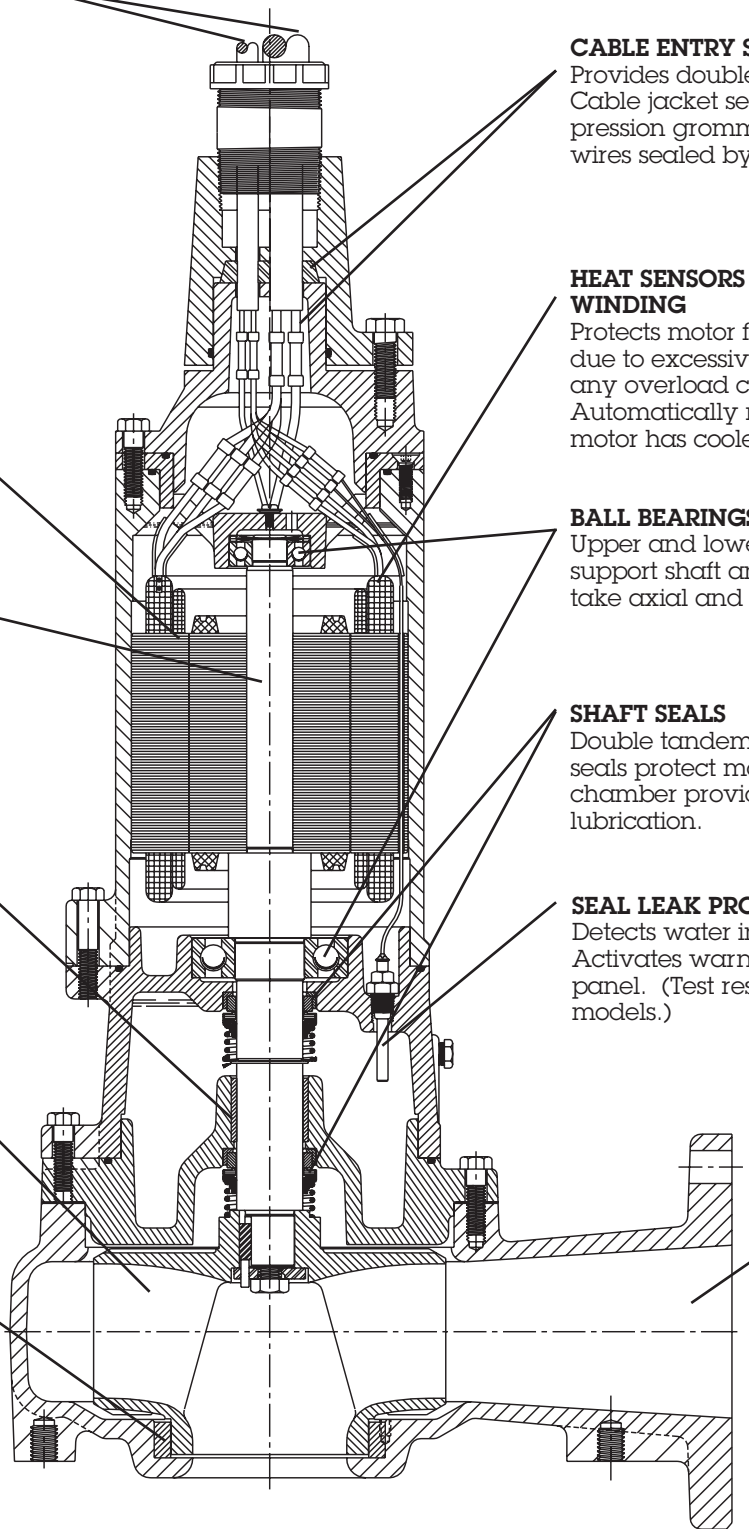

POWER & CONTROL CORDS
SOOW, UL and CSA approved oil-resistant cable.

CABLE ENTRY SYSTEM
Provides double seal protection. Cable jacket sealed by compression grommet. Individual wires sealed by epoxy potting.

HEAT SENSORS ON MOTOR WINDING
Protects motor from burnout due to excessive heat from any overload condition. Automatically resets when motor has cooled.

MOTOR STATOR
Heat shrunk into housing for perfect alignment and best heat transfer. Oil-filled for continuous lubrication of bearings and seals.

BALL BEARINGS
Upper and lower ball bearings support shaft and rotor and take axial and radial loads.

HEAVY 416 SST SHAFT
Corrosion resistant.

SHAFT SEALS
Double tandem mechanical shaft seals protect motor. Oil-filled seal chamber provides continuous lubrication.

SLEEVE BEARING
Takes radial shock load; provides flame path. (UL listed pumps only.)

SEAL LEAK PROBE
Detects water in seal housing. Activates warning light in control panel. (Test resistor on UL listed models.)

HIGH EFFICIENCY IMPELLER
Two-vane rounded port. Handles 3" solids. Pump-out vanes help keep trash from seal; reduce pressure at seal faces.

BRASS WEAR RING
Prevents rust buildup and reduces leakage and wear. Replaceable to restore original running clearance and pump efficiencies.

VOLUTE CASE
Modified constant velocity volute handles 3" solids. 4" ANSI 125 lb. flange.

DIMENSIONS

[ ] Dimensions in mm

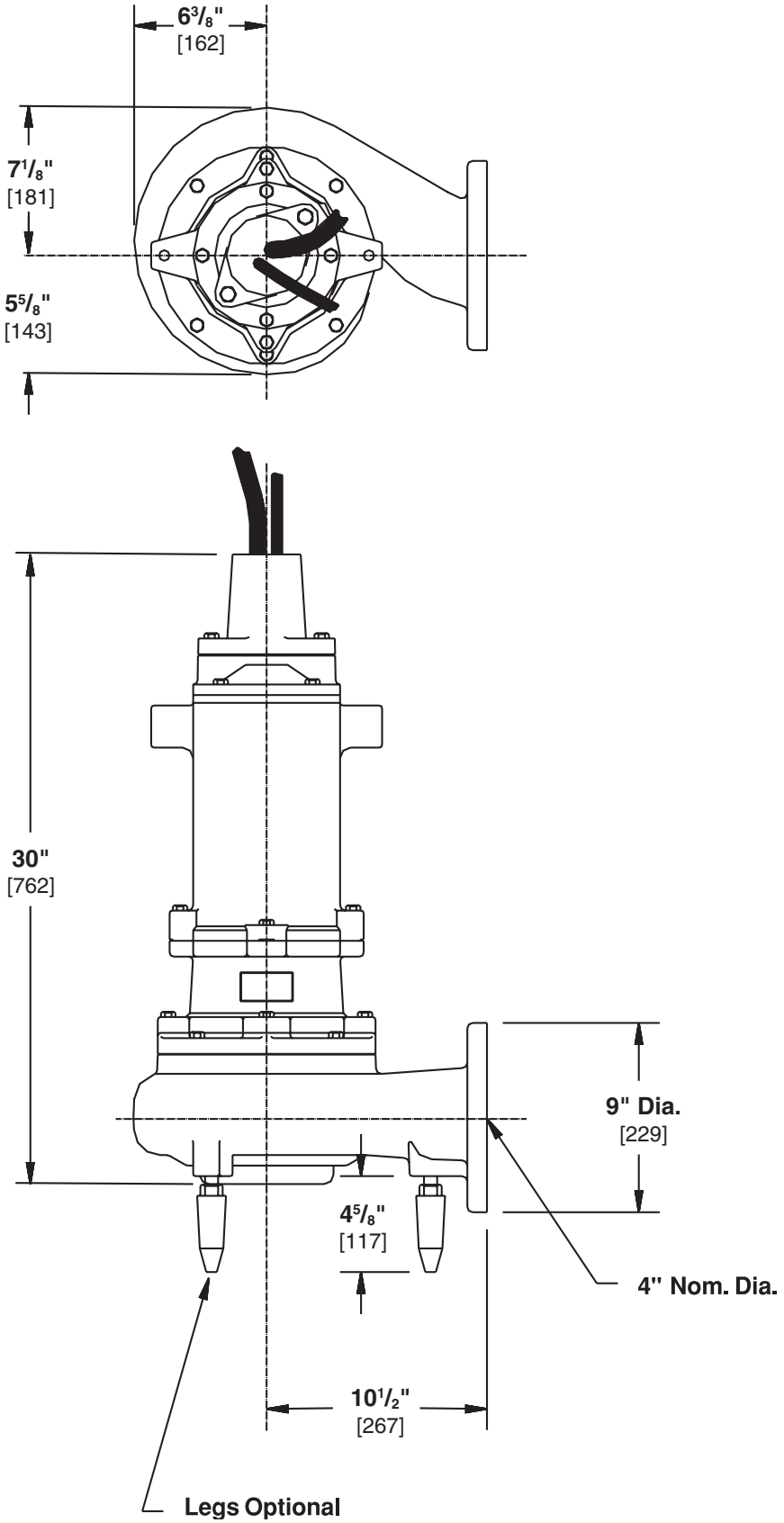

PUMP PERFORMANCE

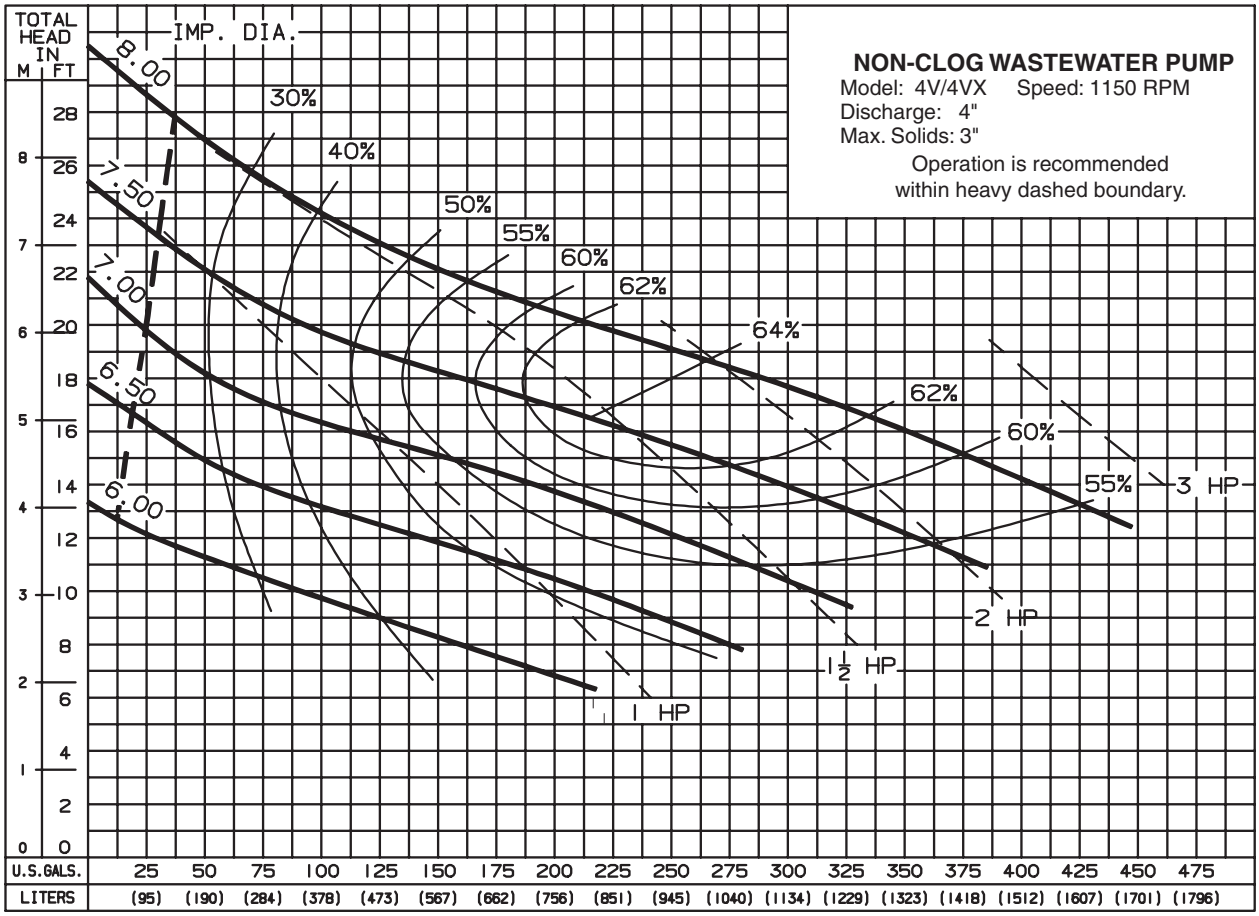

Pump performance is based on clear water (1.0 specific gravity @ 68°F) and pump fluid end (hydraulic) efficiency. Motor data based on 40°C ambient temperature.

Available Models		Motor Electrical Data												
Standard	Explosion-Proof	HP	Volts	Phase	Hertz	Start Amps	Run Amps	Service Factor Amps	Run KW	Service Factor KW	Start KVA	Run KVA	NEC Code Letter	Service Factor
4V10M6-21	4VX10M6-21	1	230	1	60	35	9	10.8	1.5	1.9	8.1	2.1	K	1.2
4V10M6-03	4VX10M6-03	1	200	3	60	23.8	7.4	8.9	1.8	2.3	8.3	2.6	K	1.2
4V10M6-23	4VX10M6-23	1	230	3	60	20.7	6.4	7.8	1.8	2.3	8.3	2.6	K	1.2
4V10M6-43	4VX10M6-43	1	460	3	60	10.4	3.2	3.9	1.8	2.3	8.3	2.6	K	1.2
4V10M6-53	4VX10M6-53	1	575	3	60	8.3	2.6	3.1	1.8	2.3	8.3	2.6	K	1.2
4V15M6-21	4VX15M6-21	1.5	230	1	60	42	11	13.2	1.9	2.4	9.7	2.5	H	1.2
4V15M6-03	4VX15M6-03	1.5	200	3	60	33.4	9.8	11.8	2.2	2.8	11.6	3.3	J	1.2
4V15M6-23	4VX15M6-23	1.5	230	3	60	29	8.5	10.2	2.2	2.8	11.6	3.3	J	1.2
4V15M6-43	4VX15M6-43	1.5	460	3	60	14.5	4.2	5.1	2.2	2.8	11.6	3.3	J	1.2
4V15M6-53	4VX15M6-53	1.5	575	3	60	11.6	3.3	4	2.2	2.8	11.6	3.3	J	1.2
4V20M6-21	4VX20M6-21	2	230	1	60	60	18	21	2.8	3.5	19.5	4.2	H	1.2
4V20M6-03	4VX20M6-03	2	200	3	60	56	12	14.5	2.4	3.6	19.5	4.2	L	1.2
4V20M6-23	4VX20M6-23	2	230	3	60	49	10.5	12.6	2.4	3.6	19.5	4.2	L	1.2
4V20M6-43	4VX20M6-43	2	460	3	60	24.5	5.2	6.3	2.4	3.6	19.5	4.2	L	1.2
4V20M6-53	4VX20M6-53	2	575	3	60	19.6	4.2	5	2.4	3.6	19.5	4.2	L	1.2
4V30M6-21		3	230	1	60	60	21	21	3.8	3.8	13.8	4.8	H	1.0
4V30M6-03		3	200	3	60	56	16.8	16.8	3.8	3.8	19.5	5.6	H	1.0
4V30M6-23		3	230	3	60	49	14	14	3.8	3.8	19.5	5.6	H	1.0
4V30M6-43		3	460	3	60	24.5	7	7	3.8	3.8	19.5	5.6	H	1.0
4V30M6-53		3	575	3	60	19.6	5.6	5.6	3.8	3.8	19.5	5.6	H	1.0

Motor Efficiencies and Power Factor									
		Motor Efficiency %				Power Factor %			
HP	Phase	Service Factor Load	100% Load	75% Load	50% Load	Service Factor Load	100% Load	75% Load	50% Load
1	1	59.5	58	53	44.5	75	72	66	58
1	3	64	61.5	55.5	46	75.5	71	62	48.5
1.5	1	56	59	55	47	80	77	73	67.5
1.5	3	68	67	63.5	56	69.5	66	59.5	50
2	1	61	59	54	45.5	73	68	60	51
2	3	71	69	64	54	71.5	58.5	51	43
3	1	60	60	60	54	78	78	71	60
3	3	73	73	70.5	64	69	69	62	51

PUMP PERFORMANCE

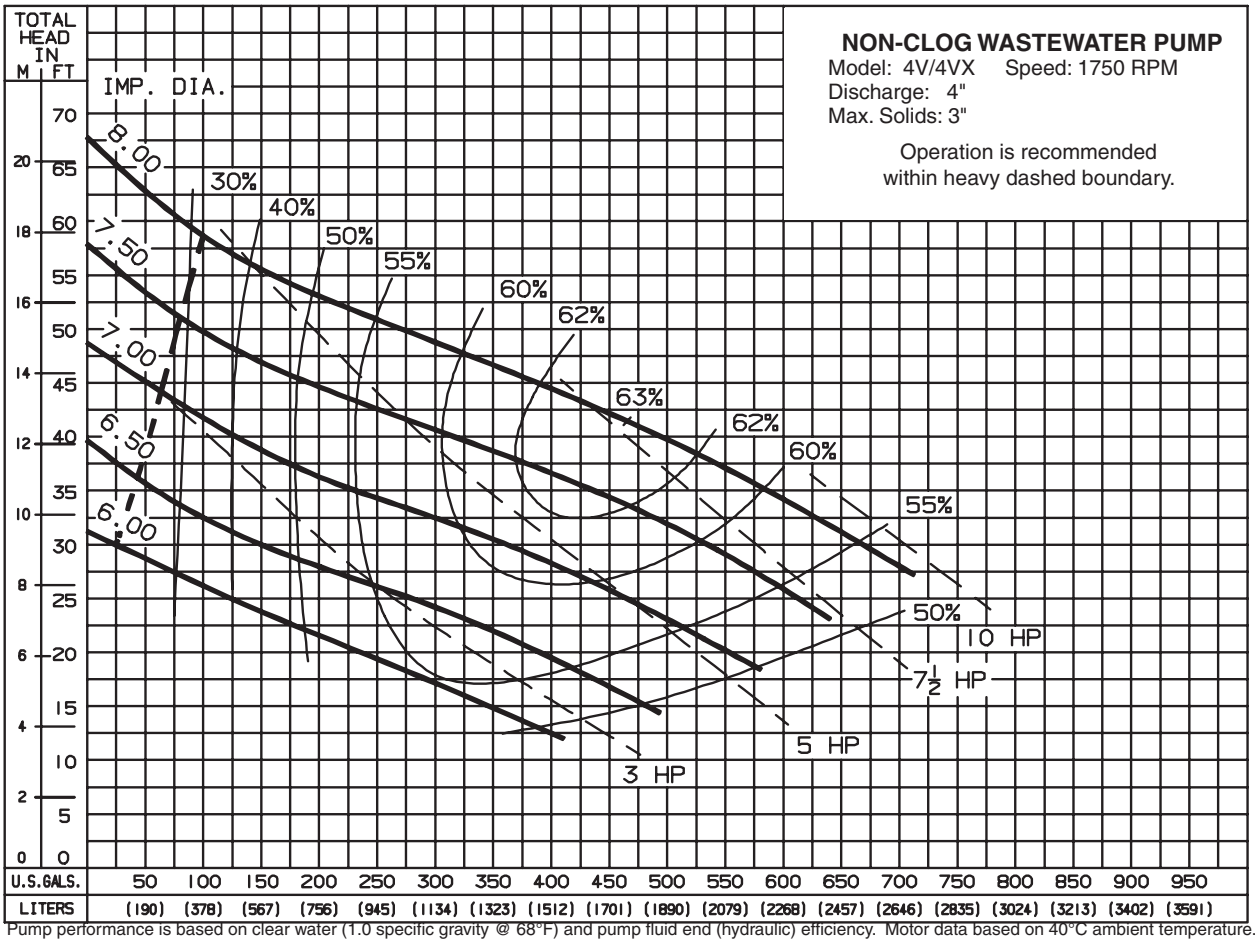

Pump performance is based on clear water (1.0 specific gravity @ 68°F) and pump fluid end (hydraulic) efficiency. Motor data based on 40°C ambient temperature.

Available Models		Motor Electrical Data												
Standard	Explosion-Proof	HP	Volts	Phase	Hertz	Start Amps	Run Amps	Service Factor Amps	Run KW	Service Factor KW	Start KVA	Run KVA	NEC Code Letter	Service Factor
4V30M4-21	4VX30M4-21	3	230	1	60	101	17.5	21	2.1	2.5	23.2	4.0	J	1.2
4V30M4-03	4VX30M4-03	3	200	3	60	66.7	15	18	3.5	4.3	23.0	5.0	G	1.2
4V30M4-23	4VX30M4-23	3	230	3	60	58	12	14.4	3.5	4.3	23.0	5.0	G	1.2
4V30M4-43	4VX30M4-43	3	460	3	60	29	6	7.2	3.5	4.3	23.0	5.0	G	1.2
4V30M4-53	4VX30M4-53	3	575	3	60	21.3	5	6	3.5	4.3	23.0	5.0	G	1.2
4V50M4-21	4VX50M4-21	5	230	1	60	141	34	41	6.3	7.7	32.4	7.8	H	1.2
4V50M4-03	4VX50M4-03	5	200	3	60	111	21.6	26	5.6	6.9	38.4	7.2	H	1.2
4V50M4-23	4VX50M4-23	5	230	3	60	96	18	21.6	5.6	6.9	38.4	7.2	H	1.2
4V50M4-43	4VX50M4-43	5	460	3	60	48	9	10.8	5.6	6.9	38.4	7.2	H	1.2
4V50M4-53	4VX50M4-53	5	575	3	60	39	7.2	8.6	5.6	6.9	38.4	7.2	H	1.2
4V75M4-03	4VX75M4-03	7.5	200	3	60	172	32.2	37	8.0	9.9	59.5	11.1	J	1.2
4V75M4-23	4VX75M4-23	7.5	230	3	60	150	28	32	8.0	9.9	59.7	11.1	J	1.2
4V75M4-43	4VX75M4-43	7.5	460	3	60	74.8	14	16	8.0	9.9	59.7	11.1	J	1.2
4V75M4-53	4VX75M4-53	7.5	575	3	60	67.2	11.2	13	8.0	9.9	66.8	11.1	K	1.2
4V100M4-03		10	200	3	60	172	37	37	10.1	10.1	59.5	12.8	G	1.0
4V100M4-23		10	230	3	60	150	32	32	10.1	10.1	59.7	12.8	G	1.0
4V100M4-43		10	460	3	60	74.8	16	16	10.1	10.1	59.7	12.8	G	1.0
4V100M4-53		10	575	3	60	67.2	13	13	10.1	10.1	66.8	12.8	H	1.0

Motor Efficiencies and Power Factor									
		Motor Efficiency %				Power Factor %			
HP	Phase	Service Factor Load	100% Load	75% Load	50% Load	Service Factor Load	100% Load	75% Load	50% Load
3	1	71	70	67	59	52	51	49	45
3	3	74	73.5	69.5	61.5	73	70.5	62.5	52
5	1	67.5	68	65	56	83	81	73	62.5
5	3	77	77	77	70.5	80	77.5	71	59.5
7.5	3	75	75	72.5	65	77	72	62	49.5
10	3	75	75	75	71	79	79	72	58

SPECIFICATIONS

PUMP MODEL – Pump shall be Myers Model Number 4V or 4VX Non-Clog Submersible Pump with 2-vane enclosed impeller. All openings in pump impeller and volute case shall be large enough to pass a 3" diameter sphere. Discharge flange shall be 4" standard. Pump and motor assembly shall be UL listed for Class 1, Group D explosion-proof service (4VX only).

OPERATING CONDITIONS – Pump shall have a capacity of _____GPM at a total head of _____ feet and shall use a _____HP motor operating at _____RPM.

MOTOR – Pump motor shall be of the sealed submersible type rated _____HP at _____RPM, 60 Hertz. Motor shall be for single phase 230 volts _____ or three phase 200 volts _____, 230 volts _____, 460 volts _____, or 575 volts _____. Single phase motors shall be of the capacitor start, capacitor run, NEMA L type. Three phase motors shall be NEMA B type.

Stator winding shall be of the open type with Class H inverter duty insulation good for 180°C (356°F) maximum operating temperature. Winding housing shall be filled with a clean high dielectric oil that lubricates bearings and seals and transfers heat from windings and rotor to outer shell. Air-filled motors that do not have the superior heat dissipating capabilities of oil-filled motors shall not be considered equal.

Motor shall have two heavy duty ball bearings to support pump shaft and take radial and thrust loads and a sleeve guide bushing directly above the lower seal to take radial load and act as flame path for seal chamber. Ball bearings shall be designed for 50,000 hours B-10 life. Stator shall be heat shrunk into motor housing.

A heat sensor thermostat shall be attached to and imbedded in the winding and be connected in series with the motor starter contractor coil to stop motor if temperature of winding is more than 120°C (248°F). Thermostat to reset automatically when motor cools to safe operating temperature. Three heat sensors to be used on 3 phase motors. The common pump, motor shaft shall be of 416 stainless steel.

SEALS – Motor shall be protected by two mechanical seals mounted in tandem with a seal chamber between the seals. Seal chamber shall be oil filled to lubricate seal face and to transmit heat from shaft to outer shell.

Seal face shall be carbon and ceramic and lapped to a flatness of one light band. Lower seal faces shall be _____ carbide (optional).

A double electrode shall be mounted in the seal chamber to detect any water entering the chamber through the lower seal. Water in the chamber shall cause a red light to turn on at the control box. This signal shall not stop motor but shall act as a warning only, indicating service is required.

IMPELLER – The impeller shall be cast ductile iron and of the 2-vane non-clog enclosed type. Vane inlet tips shall be carefully rounded to prevent stringy material from catching in vanes. Pump-out vane shall be used in front and back chamber. Impeller shall be dynamically balanced. Impeller shall be driven by stainless steel shaft key and impeller held in place with lock screw and washer. Impeller and motor shall lift off case as a unit without disturbing discharge piping.

PUMP CASE – The volute case shall be cast iron and have a flanged center line discharge. Discharge flange shall be 4” standard with bold holes straddling center line. A bronze wear ring shall be pressed into case for guiding impeller neck and to prevent corrosion freeze-up. Wear ring shall be held from rotating by locking with stainless steel set screw in end of ring.

PUMP AND MOTOR CASTING – All castings shall be of high tensile cast iron and shall be treated with phosphate and chromate rinse. All fasteners shall be 302 stainless steel.

BEARING END CAP – Upper motor bearing cap shall be a separate casting for easy mounting and replacement.

POWER CABLES – Power cord and control cord shall be double sealed. The power and control conductor shall be single strand sealed with epoxy potting compound and then clamped in place with rubber seal bushing to seal outer jacket against leakage and to provide for strain pull. Cords shall withstand a pull of 300 pounds to meet UL requirements.

Insulation of power and control cords shall be type SOOW. Both control and power cords shall have a green carrier ground conductor that attaches to motor frame.

K3374 11/08
Printed in U.S.A.

Myers®
Pentair Water

F. E. Myers, 1101 Myers Parkway, Ashland, Ohio 44805-1969
419/289-1144, FAX: 419/289-6658, www.femyers.com

Myers (Canada), 269 Trillium Drive, Kitchener, Ontario N2G 4W5
519/748-5470, FAX: 519/748-2553